Kateel®

BRAKES | BRAKE PADS | RAIL CLAMPS | CLUTCH BUTTONS

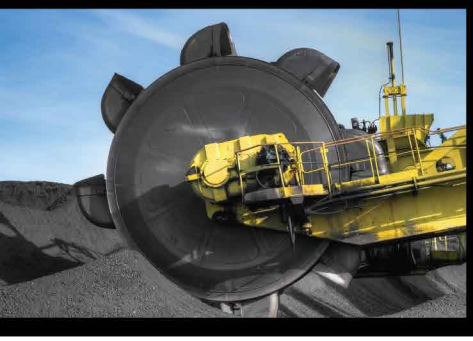

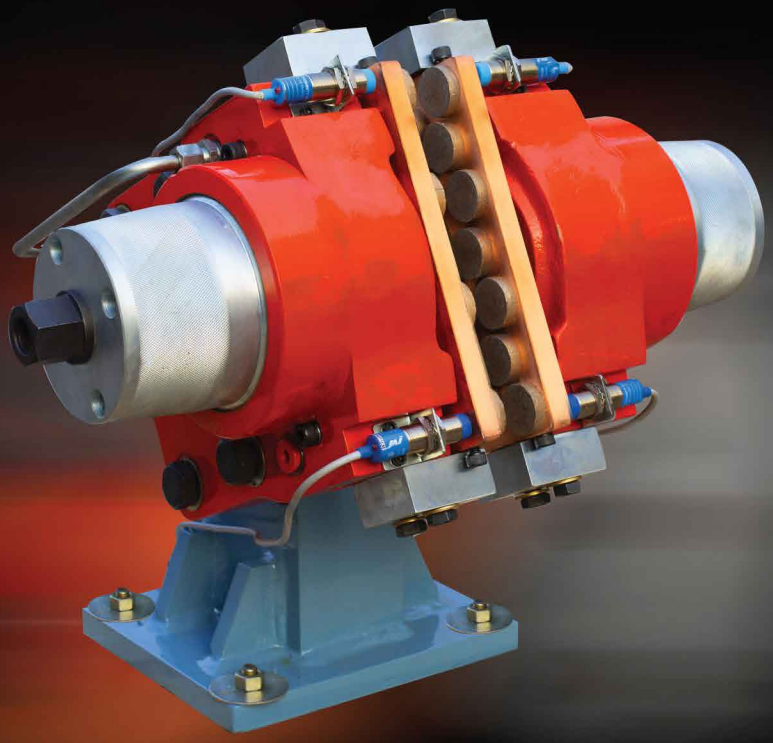

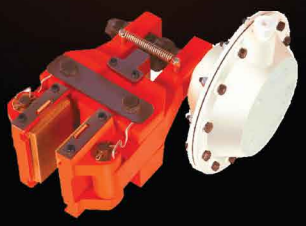

www.kateel.com

Precise | Reliable | Safe

COMPANY PROFILE

Kateel®

BRAKES | BRAKE PADS | RAIL CLAMPS | CLUTCH BUTTONS

Hydraulic Disc Brakes Mounted on Brackets

Hydraulic Disc Brake

Pneumatic Disc Brake

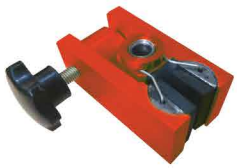

Manual Disc Brake

Kateel Engineering Industry Pvt Ltd was established in the year 1983 with a vision to create the best quality Engineering components in the Industry.

Since inception we have perfected the quality and performance of our range of products that includes all categories of Heavy Duty Industrial Brakes, Brake Pads, Rail Clamps, Clutch Buttons, Friction Liners, Thrusters, Gear Couplings, etc.

Our products are extremely reliable and safe and are well accepted across industries like Steel, Cranes & Winches, Cable making machineries, Tyre machineries, Ship unloaders, Mining, Nuclear power, Textile machineries, Test Rigs, Earth moving equipments, Locomotives, Automobiles, Hydro Turbines, Wind Turbines, Machine Tools etc.

Our successful long term association with major companies in India and worldwide gives us encouragement to continue on this journey and create value for all our customers .

We believe in providing the highest level of customer service to all our customers. With over 35 years of experience and expertise, our engineers ensure that we propose the most suitable solutions for your requirements.

Our quality assurance system conforms to the ISO 9001-2015 standards.

An ISO 9001 - 2015 Certified Company

QUEST INTERNATIONAL CERTIFICATION ISO

JAS-ANZ

PRODUCT RANGE

Katesl®

BRAKES | BRAKE PADS | RAIL CLAMPS | CLUTCH BUTTONS

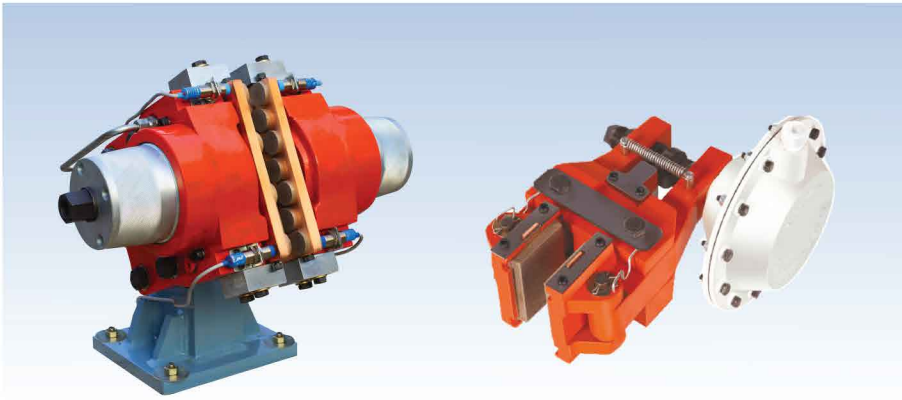

Hydraulic Disc Brake

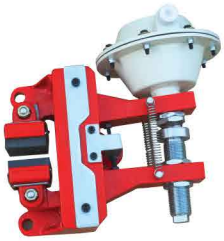

Pneumatic Disc Brake

Electro-Hydraulic Thruster Drum Brake

Hydraulic Disc Brake

DC Electro-Magnetic Thruster Drum Brake

Electro-Hydraulic Thruster Disc Brake

DISC AND DRUM BRAKES

We manufacture a wide range of Heavy Duty Disc and Drum Brakes which are available in Hydraulic, Pneumatic, Electro-hydraulic, Electro-magnetic & Mechanical versions in both Active and Fail-safe categories.

OUR RANGE OF DISC AND DRUM BRAKES		
1	Pneumatic Active Disc Brakes	Air Applied-Spring released
2	Pneumatic Fail-safe Disc Brakes	Spring Applied-Air released
3	Hydraulic Active Disc Brakes	Hydraulically Applied-Spring released
4	Hyrdaulic Fail-safe Disc Brakes	Spring Applied-Hydraulically released
5	Mechanical lever or Hand Knob Operated Disc Brakes	Manual
6	Electro-hydraulic Thruster operated Disc Brakes and Drum Brakes	Fail-safe
7	Electro-magnetic Disc Brakes and Drum Brakes	Fail-safe

PRODUCT RANGE

Katesl®

BRAKES | BRAKE PADS | RAIL CLAMPS | CLUTCH BUTTONS

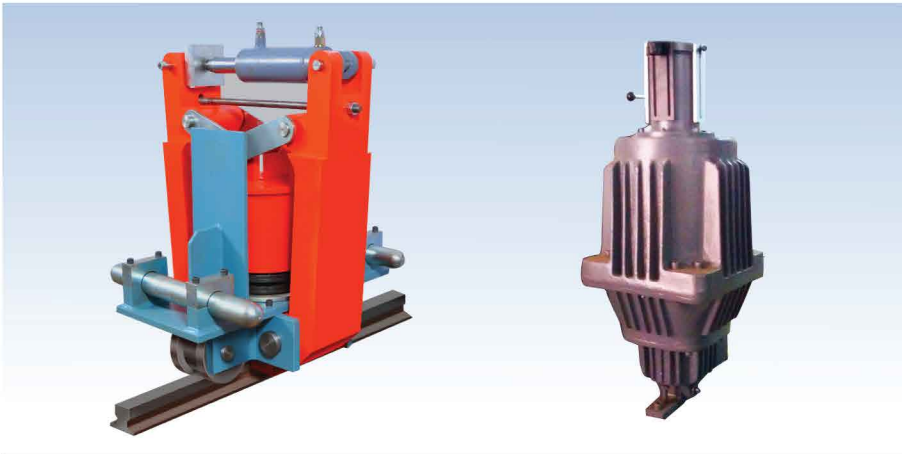

Thruster Rail Clamp

Thruster

Gear Coupling

Multispeed Gearbox

Brake Pads

We have in-house capability to manufacture high quality brake pads in both organic and sintered material depending on the customer's requirement.

Rail Clamps

We manufacture Hydraulically operated Rail Clamps and Electro-hydraulic thruster operated Rail Clamps.

Clutch Buttons & Friction Liners

We specialize in manufacturing Clutch Buttons & Friction Liners for Heavy Duty Commercial Vehicles. Our product is high wear- resistant, corrosion resistant and durable.

Thrusters

We Manufacture Heavy Duty Electro-hydraulic Thrusters. We also have the option to supply IP-65 (Dust tight) / Flame Proof Thrusters.

Gear Couplings

Our Gear Coupling product line is unique as compared to our competitors as it has a very high torque to size ratio, thus offering a compact assembly capable of high loads and high speeds.

PRODUCT APPLICATIONS

Katesl®

BRAKES | BRAKE PADS | RAIL CLAMPS | CLUTCH BUTTONS

Steel Industry

- 6 Hi Mill & 4 Hi Mill
- Galvanizing lines
- Pickling Lines
- Cranes
- Hot Metal Cranes (Service & Emergency)
- Pay-Offs & Take-Ups

Cranes

- Lifting & Lowering
- Long Travel
- Cross Travel
- Emergency Brakes on Rope Drum Flange

Cable Machineries

- Wire Drawing Machines
- Stranding Machines
- Rod Mills
- Pay-Offs & Take-Ups
- Bunching Machine

Tyre Industry

- Tyre Building Machines
- Pay-Offs

Material Handling

- Ship Loader
- Luffing
- Stacker Reclaimer
- Conveyors

Mining

- Winches
- Conveyors
- Cranes

High Intensity Sector

- Nuclear Plants For 6 M.W. Motors.

Textile Industry

- Warping Machine
- Sizing Machine
- Draw Frame
- Pay-Offs

Test Rigs

- Automobile - 2 wheeler & 4 wheeler
- Gear Box Torque Testing

Earth Moving Equipment

- Dozers
- Haulpaks
- Steering Clutch Assembly

Locomotives

- Railway Bogie
- Railway Engine

Automobiles

- Heavy Commercial Vehicles
- Tractors

Hydro Turbines

- Brakes mounted on Flywheel Flanges

Wind Turbines

- Yawing Brakes
- Rotor Brakes

Machine Tools

- Lathes
- CNC Turning
- CNC Milling

ELECTRO-HYDRAULIC DISC BRAKE

Katesl®

BRAKES | BRAKE PADS | RAIL CLAMPS | CLUTCH BUTTONS

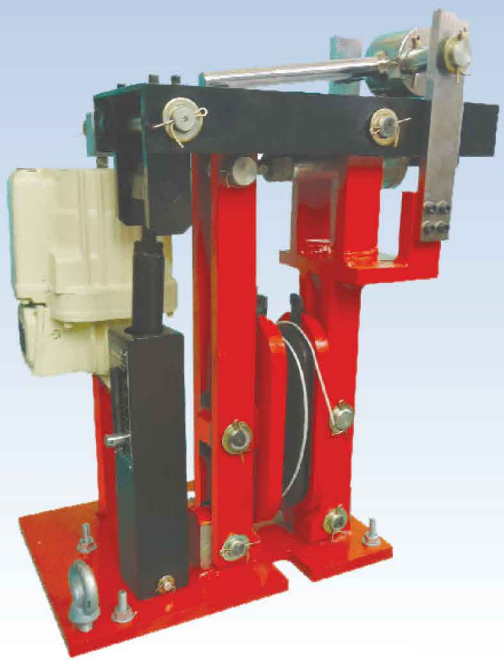

KEHDCB-2000

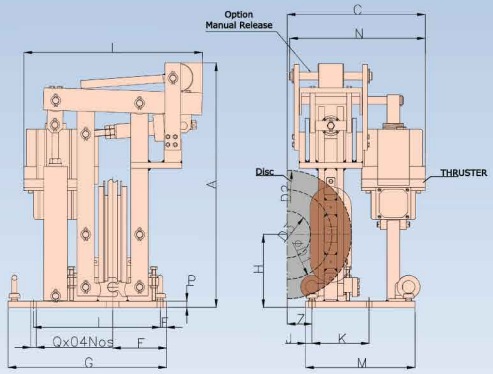

KEHDCB-7000

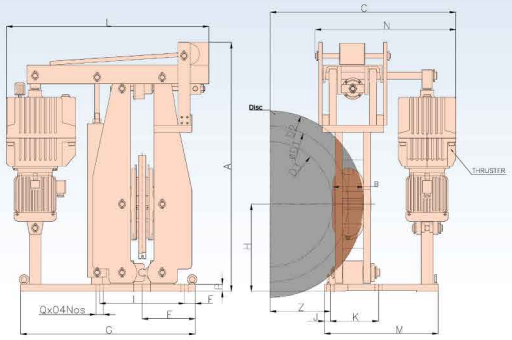

TECHNICAL DATA MODEL : KEHDCB CATALOG No : 8416.077.000

Model	A Max	B shoe width	D LINER width	E	F	G	H	I	J	K	L	M	N	P	Q
KEHDCB-2000	830	130	110	170	20	500	230	400	20	180	625	345	450	20	18
KEHDCB-7000	1055	130	110	225	45	740	350	360	25	205	920	480	520	30	32

Model:KEHDCB-2000 Weight:250kg (without thruster) BRAKE DISC = 30mm thickness					TORQUE IN N m Thruster Type					
					EHT 30/5		EHT 50/6		EHT 80/6	
D2	D1	D3	Z	C MAX	MIN	MAX	MIN	MAX	MIN	MAX
400	270	120	76	665	600	830	710	1760	1190	2610
450	320	150	101	690	680	950	820	2020	1350	3000
500	370	200	126	715	750	1070	920	2260	1500	3360
560	430	260	156	745	850	1210	1040	2560	1700	3810
630	500	330	191	780	980	1380	1180	2920	1950	4350
710	580	410	231	820	1100	1590	1370	3380	2250	5020

NOTE:

D1: Theoretical friction diameter
D2: Outer disc diameter
D3: Max possible coupling or hub diameter

STANDARD FEATURES:

1. Powder coated in red color.
2. Manual release option.
3. Torque adjustment option.

Model:KEHDCB-7000 Weight:315kg (without thruster) BRAKE DISC = 30mm thickness					TORQUE IN N m Thruster Type					
					EHT 121/6		EHT 201/6		EHT 301/6	
D2	D1	D3	Z	C MAX	MIN	MAX	MIN	MAX	MIN	MAX
560	430	260	127	672	2650	6000	3200	9200	2700	12400
630	500	330	162	707	3200	7250	3850	11100	3250	14950
710	580	410	202	747	3700	8350	4450	12800	3750	17200
800	670	500	247	792	4250	9600	5100	14700	4300	19750
900	770	600	297	842	4750	10800	5750	16550	4850	22250
1000	870	700	347	892	5350	12200	6500	18650	5450	25100
1250	1120	950	472	1017	6800	15500	8250	23700	6900	31850

OPTIONAL FEATURES:

1. Sintered Brake Pad.
2. Auto wear adjustment.
3. Brake ON/OFF switch.
4. Pins and Fasteners are SS material.
5. Thruster-IP-65(Dust tight) / Flame Proof Thruster.
6. Smooth Braking / Time adjustment.

ELECTRO-HYDRAULIC DRUM BRAKE

Katesl®

BRAKES | BRAKE PADS | RAIL CLAMPS | CLUTCH BUTTONS

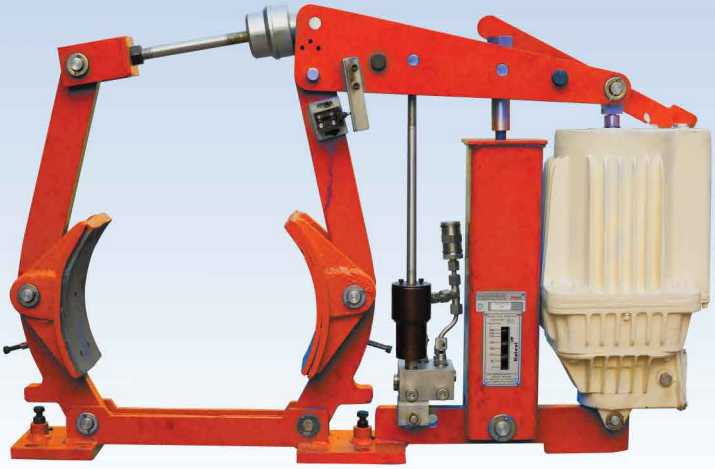

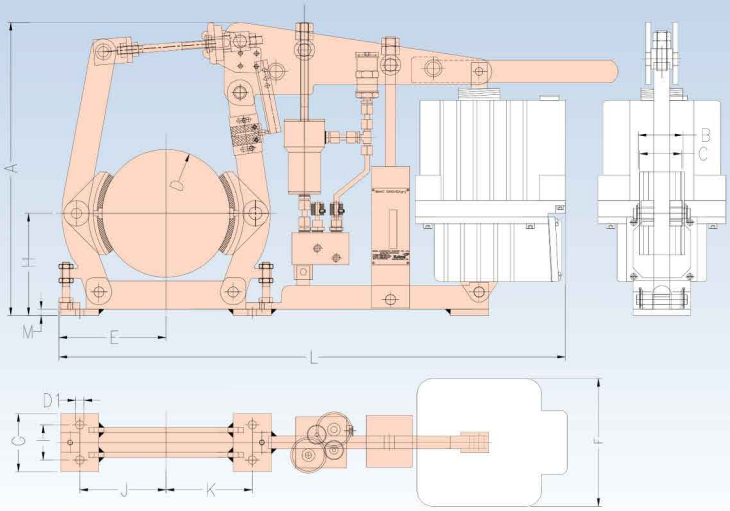

TECHNICAL DATA — MODEL : K - EHDB — CATALOG No : 8526.001.000

Drum Ø	Hydraulic Thruster	TBR[N m] μ=0.35	TBR[N m] μ=0.4	A Max	B Shoe Width	C Liner Width	D	D1	E	F	G	H	I	J	K	L Max	M
100	K-HT-30/5	20-50	20-60	463	55	55	100	11	140	200	90	130	55	120	120	710	10
160	K-HT-30/5	40-200	40-220	463	55	55	160	11	140	200	90	130	55	120	120	710	10
200	K-HT-30/5 K-HT-50/6	40-320 90-500	50-420 120-600	566	75	70	200	14	185	200	90	155	55	145	145	800	12
250	K-HT-30/5 K-HT-50/6	40-325 90-600	50-420 120-800	585	95	90	250	18	205	200	100	185	65	180	80	900	13
315	K-HT-30/5 K-HT-50/6 K-HT-80/6	60-420 90-710 90-1220	80-525 120-940 120-1610	668	118	110	315	18	300	200 200 240	110	225	80	220	220	1003	13
400	K-HT-50/6 K-HT-80/6 K-HT-121/6	150-710 150-1220 130-1950	200-940 200-1610 170-2580	730	150	140	400	22	310	200 240 240	140	270	100	270	270	1135	15
500	K-HT-50/6 K-HT-80/6 K-HT-121/6 K-HT-201/6	190-940 190-1580 190-2420 190-3800	250-1250 250-2080 250-3200 250-5000	840	190	180	500	22	370	200 240 240 240	170	330	130	325	325	1310	20
630	K-HT-121/6 K-HT-201/6 K-HT-301/6	260-2420 260-3800 260-5750	350-3200 350-5000 350-7600	1060	236	220	630	27	450	240	220	410	170	400	400	1530	25
710	K-HT-121/6 K-HT-201/6 K-HT-301/6	340-2730 340-4250 340-6500	450-3600 450-5600 450-8600	1123	265	220	710	27	520	240	240	460	190	450	450	1720	25

Available Optional Items

- Stainless Steel Pins
- Brake On/Off Switch
- Auto Wear Adjustment
- Manual Release
- IP-65(Dust tight) / Flame Proof Thruster
- Smooth Braking / Time Adjustment

ELECTRO-HYDRAULIC DRUM BRAKE (Thruster Mounted Horizontally)

Katesl®

BRAKES | BRAKE PADS | RAIL CLAMPS | CLUTCH BUTTONS

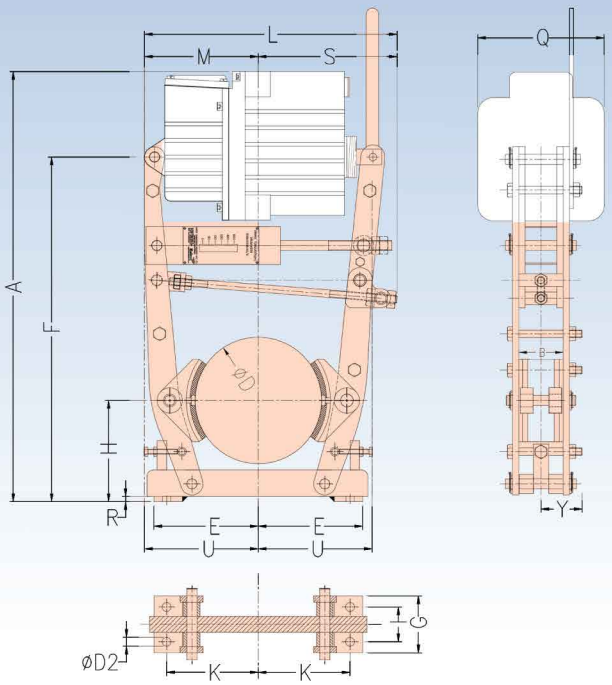

TECHNICAL DATA **MODEL : K - EHDB-V** **CATALOG No : 8526.002.000**

Drum Ø	Thruster Type	MBRmax[N m] μ=0.35	MBRmax[N m] μ=0.4	A MAX	B SHOE WIDTH	D	D2	E	F	G	H	I	K	L MAX	M MAX	Q	R	S MAX	U	Y	W KG
200	K-HT-30/5	40-320	50-420	640	70	200	14	165	520	90	160	55	145	485	210	200	8	315	180	60	17
250	K-HT-30/5 K-HT-50/6	40-325 90-600	50-425 120-800	745	90	250	18	200	590	100	190	65	180	600	215	200	8	315	215	70	23
315	K-HT-30/5 K-HT-50/6 K-HT-80/6	60-400 90-710 90-1220	80-525 120-940 120-1610	670 910 910	110	315	18	245	738	110	230	80	220	610 670 670	280 290 290	200 200 240	10	330 380 430	265	125	36
400	K-HT-50/6 K-HT-80/6 K-HT-121/6	150-710 150-1220 130-1950	200-940 200-1610 170-2580	1010 1010 1000	140	400	22	305	845	140	280	100	270	690 690 870	300 300 400	200 240 240	10	430 480 480	320	140	70
500	K-HT-50/6 K-HT-80/6 K-HT-121/6 K-HT-201/6	190-940 190-1580 190-2420 190-3800	250-1250 250-2080 250-3200 250-5000	1120 1120 1110 1110	180	500	22	360	954	170	340	130	325	740 740 900 900	320 320 410 410	200 240 240 240	12	430 500 500 530	400	170	130

Available Optional Items

- Stainless Steel Pins
- Brake On/Off Switch
- Auto Wear Adjustment
- Manual Release
- IP-65(Dust tight) / Flame Proof Thruster
- Smooth Braking / Time Adjustment

THRUSTERS

Katesl®

BRAKES | BRAKE PADS | RAIL CLAMPS | CLUTCH BUTTONS

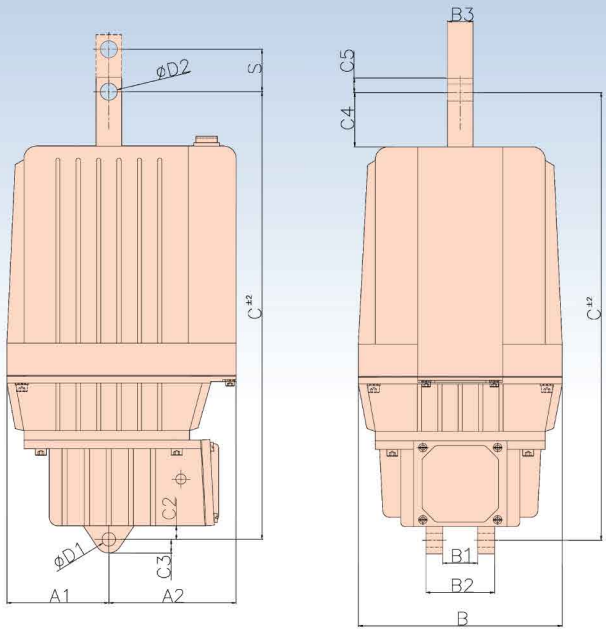

STANDARD FEATURES

1. Suitable for ambient temp from -20°C to +55°C
2. Operating Voltage options:
   415V AC, 50 Hz; 380 V AC 50 Hz;
   690V AC, 50 Hz; IP-65, F-Class Insulation.
3. Aluminium Motor Housing, Reservoir and Terminal Box Cover.
4. Can be mounted in any direction.

AVAILABLE OPTIONAL ITEMS

1. Special AC Electric voltage motor for any voltage, 50Hz or 60 Hz.
2. Long Stroke version.
3. Inbuilt Spring.
4. Open and Close position Limit switches.
5. Flame proof version.

TECHNICAL DATA **MODEL : K-HT** **CATALOG No : 8530.001.000**

Size	Force (N)	Stroke (mm)	A1 (max)	A2 (max)	B (max)	B1 (max)	B2 (max)	B3 (max)	C (max)	C2 (max)	C3 (max)	C4	C5 (max)	D1	D2
K-HT-23/5	250	50	85	100	170	41	65	25	335	16	15	25	10	16	12
K-HT-30/5	350	50	100	135	200	41	81	25	345	16	16	45	14	16	12
K-HT-50/6	500	60	100	135	200	41	81	25	345	16	16	45	14	16	12
K-HT-80/6	800	60	120	150	240	41	81	30	531	16	16	64	17	20	16
K-HT-121/6	1210	60	120	150	240	41	81	30	531	16	16	64	17	29	16
K-HT-201/10	2010	100	140	170	280	41	81	40	572	16	16	70	22	20	25
K-HT-301/10	3010	100	140	170	280	41	81	40	572	16	16	70	22	20	25

HYDRAULIC RAIL CLAMP

Katesl®

BRAKES | BRAKE PADS | RAIL CLAMPS | CLUTCH BUTTONS

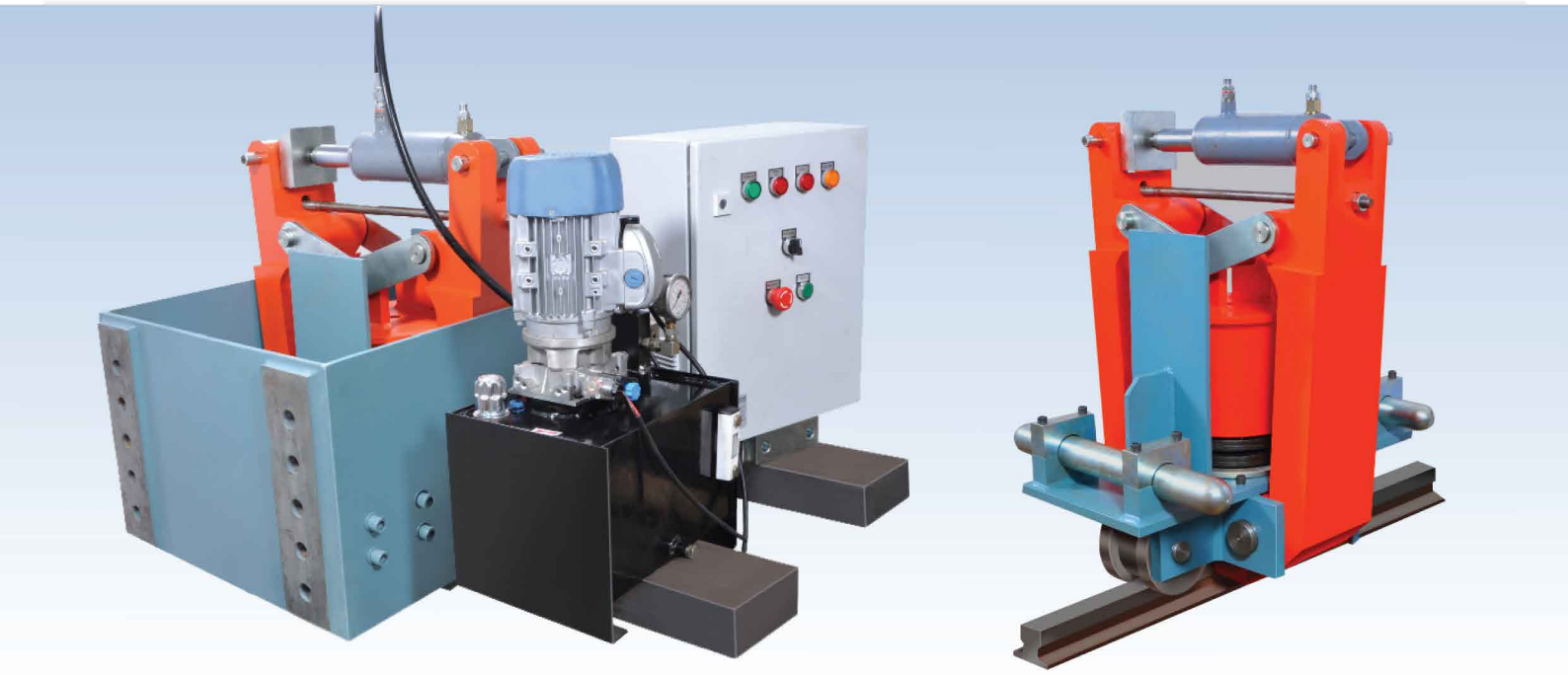

Rail clamps are used as a parking brake for the Tripper cars operating at sea shores. It consists of two main links; one end is connected to a **hydraulic cylinder** while the other end is fitted with Brake pads. Both main links are hinged and supported by internal frame. The main links are also connected to springs through connecting links. The external frame is connected to tripper structure.

During parking condition, the tripper car is held by clamping of the rails by spring force. To move the tripper car, rail clamp is released by actuating the **hydraulic cylinder**. The external and internal frames are connected through a floating arrangement to accommodate the misalignment generated during tripper car movement.

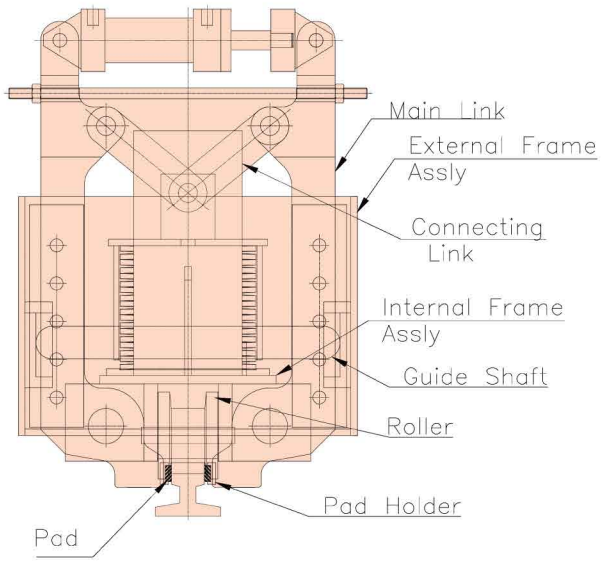

Design data	
Pad dimension:	60mm x 30mm
No. of pads:	3 per side
Pad area:	60 x 30 x 3 = 5400 mm^2 per side
Max. Allowable wear of brake pad:	5mm
Nominal co-efficient of friction:	0.25
Clamping force up to:	520000 N Max
Restraining force up to:	130000 N Max
Operating pressure:	120 bar
Weight of brake:	600Kgs

ELECTRO-HYDRAULIC RAIL CLAMP

Katesl®

BRAKES | BRAKE PADS | RAIL CLAMPS | CLUTCH BUTTONS

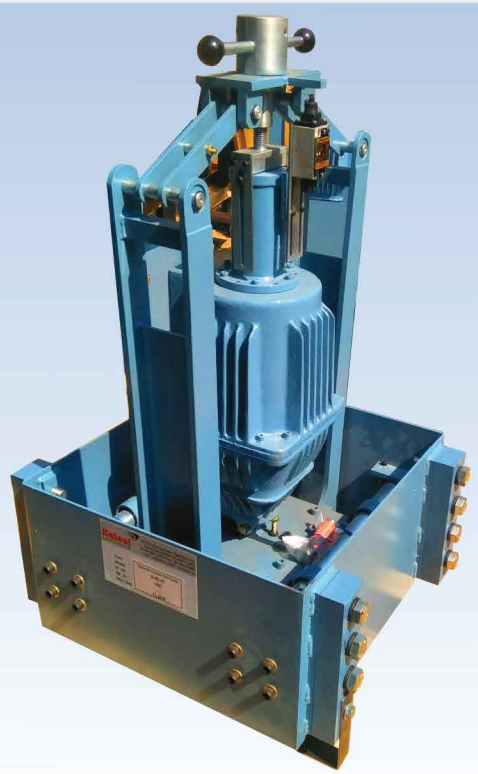

Rail clamps are used as a parking brake for the Tripper cars operating at sea shores. It consists of two main links; one end is connected to an **Electro-hydraulic Thruster** while the other end is fitted with Brake pads. Both main links are hinged and supported by internal frame. The main links are also connected to springs through connecting links. The external frame is connected to tripper structure.

During parking condition, the tripper car is held by clamping of the rails by spring force. To move the tripper car, rail clamp is released by actuating the **Electro-hydraulic Thruster**. The external and internal frames are connected through a floating arrangement to accommodate the misalignment generated during tripper car movement.

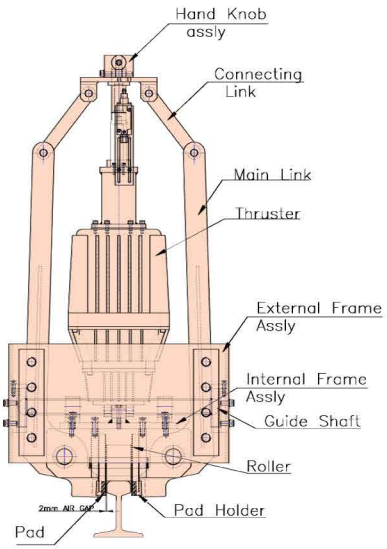

Design data	
Pad dimension:	60mm x 30mm
No. of pads:	3 per side
Pad area:	60 x 30 x 3 = 5400 mm^2 per side
Max. Allowable wear of brake pad:	5mm
Nominal co-efficient of friction:	0.25
Clamping force up to:	20000 N Max
Restraining force up to:	5000 N Max
Operating pressure:	Thruster, capacity 301/6.
Weight of brake:	400 Kgs

ELECTRO-MAGNETIC DRUM BRAKE

Katesl®

BRAKES | BRAKE PADS | RAIL CLAMPS | CLUTCH BUTTONS

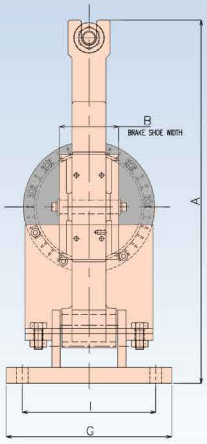

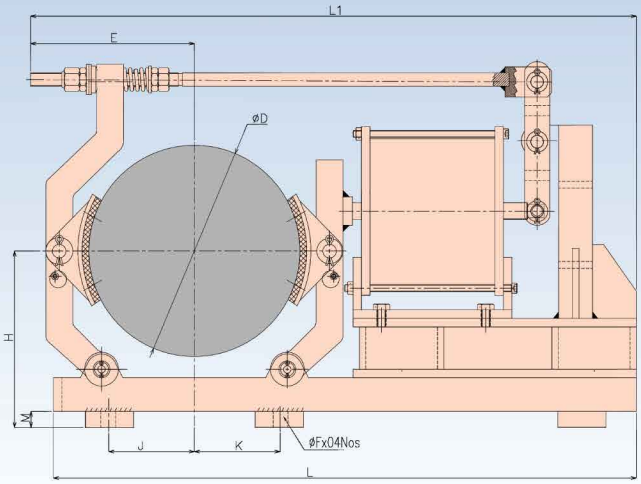

TECHNICAL DATA — MODEL : K - EMDB — CATALOG No : 8409.02.001

	METRIC (Dimensions in mm)								AISE (Dimensions in inches)							
Size	**100**	**150**	**200**	**250**	**300**	**400**	**500**	**600**	**4”**	**6”**	**8”**	**10”**	**13”**	**16”**	**19”**	**23”**
A	280	280	338	400	480	590	716	845	11	11	13-5/8	15-3/4	19	22-3/4	25-5/8	30-3/8
B	80	80	80	89	140	165	216	279	3-1/8	3-1/8	3-1/8	3-1/2	5-1/2	6-1/2	8-1/2	11
D	100	150	200	250	300	400	500	600	4	6	8	10	13	16	19	23
E	135	135	164	200	238	305	360	418	5	5	6-1/2	8	9-7/8	12-1/4	14-1/2	18-1/8
F	17	17	17.5	17.5	22	25	25	38	11/16	11/16	11/16	11/16	13/16	1-1/16	1-1/16	1-5/16
G	185	185	121	196	165	184	400	484	7-1/4	7-1/4	7-1/4	7-3/4	11	13	15-3/4	19
H	137	137	170	212	250	320	400	475	5-1/2	5-1/2	7	8-3/8	9-7/8	12-1/8	13-1/4	15-7/8
I	145	145	60	158	80	90	100	126	5-3/4	5-3/4	5-3/4	6-1/4	9	10-3/4	13	16
J	90	90	175	101.5	250	170	205	250	3-1/2	3-1/2	3-1/4	4	5-7/5	7-1/2	9-1/4	11-7/5
K	90	90	175	101.5	250	170	205	250	3-1/2	3-1/2	3-1/4	4	5-7/5	7-1/2	9-1/2	11-7/5
L	500	500	600	552	789	733	932	1092	19-1/4	19-1/4	19-1/4	21-6/8	26-1/2	29-2/8	29-2/8	41-3/4
L1	530	530	581	631	762	861	1043	1201	20-8/7	20-8/7	21-8/7	25	29-1/4	33	40-8/7	48-4/8
M	12	12	12	15	18	20	20	22	2/4	2/4	13/16	3/4	3/4	1-5/16	1-5/16	1-5/16

TORQUE RATING FOR SHUNT BRAKES

BRAKE SIZE	TORQUE RATING					
	DC Operation				Cont.Duty	
	Cont.Duty		Int.Duty		AC Operation	
mm	Lbf.ft	N m	Lbt.ft	N m	Lbt.ft	N m
100	18.4	25	29.5	40	29.5	40
150	51.6	70	70.8	96	70.8	96
200	75	102	100	136	100	136
250	150	203	200	271	200	271
300	400	543	550	746	550	746
400	750	1017	1000	1356	1000	1356
500	1500	2043	2000	2712	2000	2712
600	3000	4067	4000	5423	4000	5423

GEAR BOX

Katesl®

BRAKES | BRAKE PADS | RAIL CLAMPS | CLUTCH BUTTONS

Heavy duty Industrial Multi Speed Gear Boxes are designed for continuous operation and used for speed adjustment at constant power level. Based on standard cast-iron casing, the versatile design allows several options.

- The supplied output shaft can be rotated in the same or opposite direction.
- Motor Flange can be supplied for direct motor mounting.

Features

Used as Multipliers or Reducers
Efficiency: Up to 0.95%
May be mounted in any position
Manual Shifting of Speed

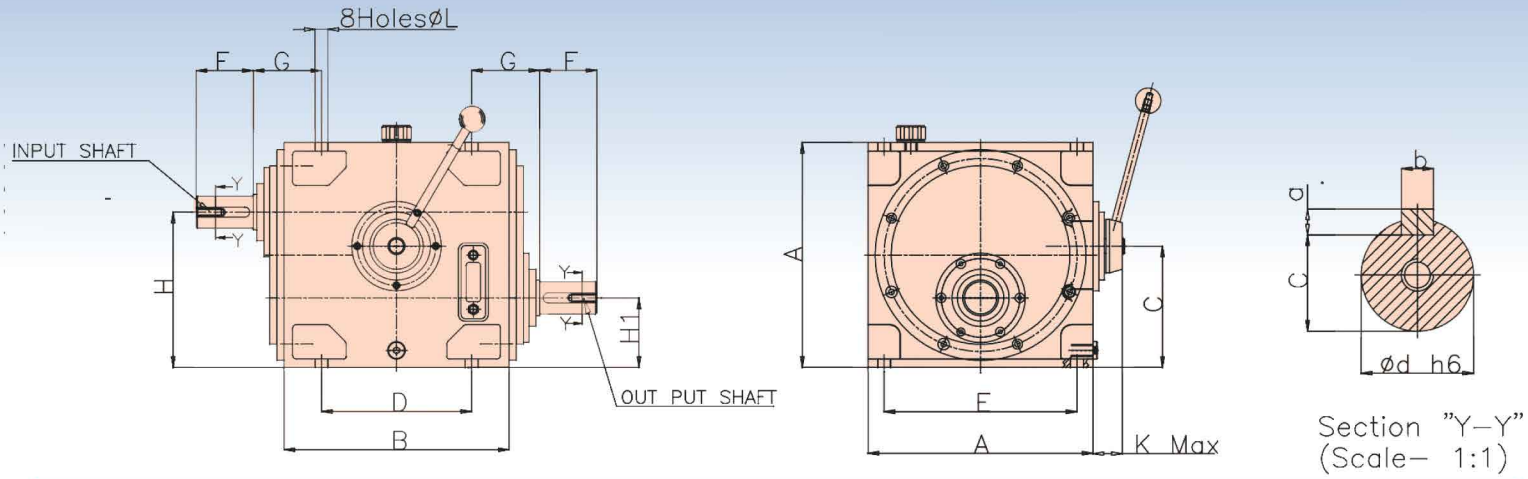

DIMENSIONS											
Model	A	B	C	D	E	F	G	H	H1	K MAX	L
K-MSGB-250	250	200	125	136	220	65	73.5	170	80	60	13
K-MSGB-315	315	315	170	210	270	80	95	217.5	97.5	90	18
K-MSGB-250-3SN	250	200	125	136	220	65	73.5	170	80	60	13
K-MSGB-250-4SN	315	315	170	210	270	80	95	217.5	97.5	90	18

Model	Power	SPEED RATIO				
		1	2	3	4	
K-MSGB-250	10HP	1.0	2.35	3.75		
K-MSGB-250	15HP	1.0	2.35	3.75		
K-MSGB-250-3SN	15HP	1.0	2.35	3.75		with neutral
K-MSGB-250-4SN	10HP	1.0	1.56	2.37	3.75	with neutral
K-MSGB-315	25HP	1.0	2.35	3.75		

KEY WAY				
Model	a	b	c	d
K-MSGB-250	8	10	30	35
K-MSGB-315	9	14	39.5	45

HALF GEAR COUPLING

Katesl®

BRAKES | BRAKE PADS | RAIL CLAMPS | CLUTCH BUTTONS

KHG HALF GEAR COUPLING

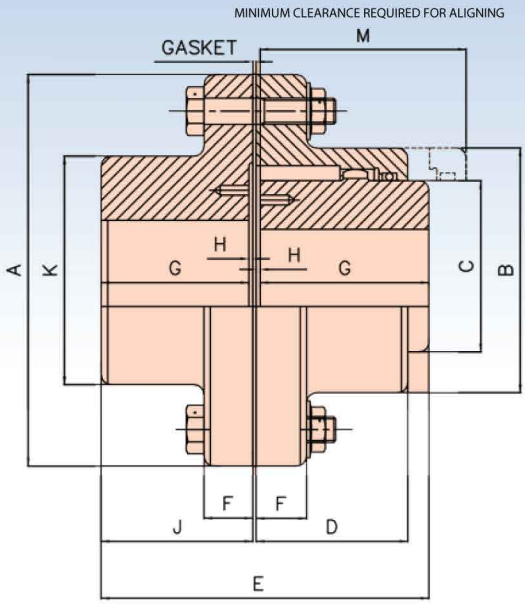

SIZE KHG	MAX BORE		PILOT BORE MM.	LOAD CAPACITY		MAX RPM	Wt. with SOLID HUBS KG.	GD² KG. M	DIMENSIONS IN MM.										
	GEAR	RIGID		Torque Kg.M	H.P/100 RPM				A	B	C	D	E	F	G	H	J	K	M
100	35	50	10	50	7	8000	4.2	0.03	120	75	50	39.5	93	15	45	1.5	46.5	70	55
101	50	60	20	100	14	6300	10	0.14	170	110	65	49	115	17	55	2.5	57.5	85	65
102	60	75	30	250	35	5000	15	0.2	185	125	85	62	145	17	70	2.5	72.5	110	80
103	75	90	40	450	63	4000	26	0.48	220	150	105	78	175	20	85	2.5	87.5	130	105
104	90	110	50	850	119	3350	40	0.95	250	175	130	96	215	20	105	2.5	107.5	160	125
105	110	130	60	1300	182	2800	62	1.9	290	200	155	106	230	25	110	5.0	115	185	140
106	125	150	75	2000	280	2500	85	3.0	320	230	175	117	260	25	125	5.0	130	215	155
107	140	170	90	3500	490	2100	120	5.25	350	260	205	136	290	25	140	5.0	145	240	175
108	160	200	105	4500	630	1900	180	8.5	380	290	230	147	320	25	155	5.0	160	285	190
109	180	220	125	5600	784	1700	210	15.0	430	330	250	156	340	25	165	5.0	170	315	205
110	220	260	140	8200	1148	1400	290	30.5	490	390	310	171	370	25	180	5.0	185	370	220

Note: Dimensional details are susceptible to changes without prior notice for continuous improvement.

FULL GEAR COUPLING

Katesl®

BRAKES | BRAKE PADS | RAIL CLAMPS | CLUTCH BUTTONS

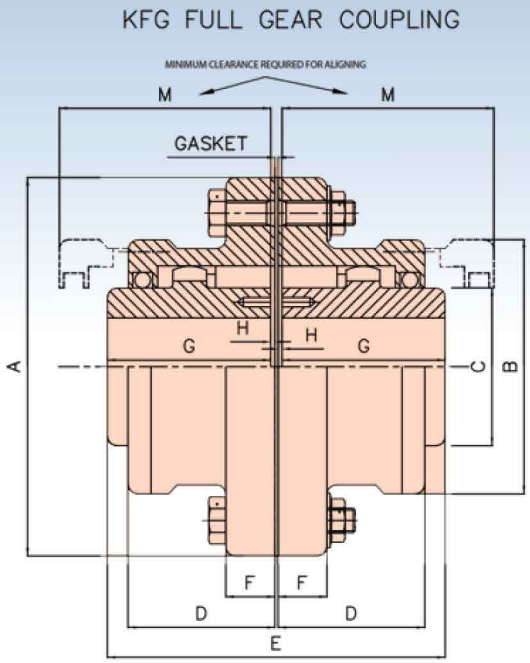

SIZE KFG	BORE		LOAD CAPACITY		MAX RPM	WT. WITH SOLID HUBS KG.	GD² KG. M	DIMENSIONS IN MM.								
	MAX	PILOT	Torque Kg.M	H.P/100 RPM				A	B	C	D	E	F	G	H	M
100	35	10	50	7	8000	4.2	0.03	120	75	50	39.5	93	15	45	1.5	45
101	50	20	100	14	6300	10	0.14	170	110	65	49	115	17	55	2.5	65
102	60	30	250	35	5000	15	0.20	185	125	85	62	145	17	70	2.5	80
103	75	40	450	63	4000	26	0.48	220	150	105	78	175	20	85	2.5	105
104	90	50	850	119	3350	40	0.95	250	175	130	96	215	20	105	2.5	125
105	110	60	1300	182	2800	62	1.90	290	200	155	106	230	25	110	5.0	140
106	125	75	2000	280	2500	85	3.00	320	230	175	117	260	25	125	5.0	155
107	140	90	3500	490	2100	120	5.25	350	260	205	134	290	25	140	5.0	175
108	160	105	4500	630	1900	180	8.50	380	290	230	147	320	25	155	5.0	190
109	180	125	5600	784	1700	210	15.0	430	330	250	156	340	25	165	5.0	205
110	220	140	8200	1148	1400	290	30.5	490	390	310	171	370	25	180	5.0	220

SIZE KFG	BORE		LOAD CAPACITY		MAX RPM	Wt. with SOLID HUBS KG.	GD² KG. M	DIMENSIONS IN MM.								
	MAX	PILOT	Torque Kg.M	H.P/100 RPM				A	B	C	D	E	F	G	H	M
111	260	160	11000	1536	1250	550	58	545	445	350	192	410	30	200	5	240
112	300	180	14700	2053	1120	710	88	590	490	400	231	490	30	240	5	280
113	330	200	20000	2793	1000	980	138	680	555	440	242	535	35	260	7.5	310
114	370	220	28600	3994	900	1320	291	730	610	500	266	575	35	280	7.5	330
115	410	250	34750	4852	800	1700	353	780	660	540	305	655	35	320	7.5	370
116	455	300	60000	8378	710	2550	680	900	755	625	335	720	45	350	10	425
117	520	375	85350	11917	630	3620	1235	1000	855	720	386	820	45	400	10	460
118	610	450	113000	15778	560	4860	1965	1100	950	810	430	920	55	450	10	510
119	710	520	149000	20805	500	6380	3012	1250	1050	910	446	1000	55	485	15	560

Note: Dimensional details are susceptible to changes without prior notice for continuous improvement.

Kateel®

BRAKES | BRAKE PADS | RAIL CLAMPS | CLUTCH BUTTONS

OUR PRESTIGIOUS CUSTOMERS

Adani Power Maharashtra Ltd. Maharashtra
ANDRITZ HYDRO Private Limited. Bhopal
Asian Colour Coated Ispat Ltd. Raigad
BGR Energy Systems Limited. Chennai
Bhushan Power & Steel Limited. Ghaziabad
Bokaro Steel Plant. Bokaro
CMI FPE Ltd. Mumbai
Crompton Greaves Ltd. Mandideep
Danieli Centro Combustion India Pvt. Ltd. Pune
Danieli India Ltd. Chittoor
Energo Engineering Projects Ltd. Gurgaon
Esmech Equipments Pvt Ltd. Wada
Essar Projects Limited. Hissar
FL Smidth Private Ltd. TamilNadu
GE India Technology Center Pvt Ltd. Bangalore
Haryana Iron Works Private Limited. Kolkata
Hindalco Industries Ltd. Singrauli
Jash Engineering Limited. Indore
Jindal Saw Ltd. Nashik
JSW Group
Kalinga Commercial Corp. Ltd. Bhubaneshwar
Krishnapatnam Port Co. Limited. Nellore
Larsen & Toubro Limited. Tamilnadu
Macmet India Ltd. Kolkata
Maheshwari Mining Private Ltd. Raniganj
Maisha Mabati Mills Ltd. Kenya
MB Power Limited. New Delhi
MSPL Limited. Hospet
Mukand Limited. Navi Mumbai
National Aluminium Company Ltd. Damanjodi
Omex Engineering Pvt Ltd. Vadodara
Primetals Technologies India Private Limited. Mumbai
Siemens Ltd Chennai
SMS Meer India Pvt. Ltd. Gurgaon
Steel Authority of India Limited. IISCO. Burnpur
Suzlon Global Services Limited. Chennai
JSW Steel Coated Products Limited. Tarapur
Tata Steel Limited. Jamshedpur
TD Power Systems Limited. Bangalore
Tenova India Pvt Ltd. Mumbai
The Hutti Gold Mines Company Ltd. Raichur
Thermal Powertech Corporation India Limited. Nelaturu
Thyssenkrupp Industries India Private Limited. Pune
Ultratech Cement Ltd. M.P
WEG Industries (India) Pvt Limited. Hosur

Represented by :

TEXTILE
AUTOMOBILE
CRANES
TYRE
STEEL
LOCOMOTIVE
CABLE
MINING
WIND
HYDRO

www.kateel.com

KATEEL ENGINEERING INDUSTRY (P) LTD.
779, 1st Floor, 4th Cross, 11th Block,Opp. St.Sophia High School,
Nagarabhavi, Bangalore - 560 072, Karnataka, INDIA.
Phone : +91-80-23484179 / +91-80-23210850 ; Fax : +91-80-23481305
E-mail : info@kateel.com / mktg@kateel.com